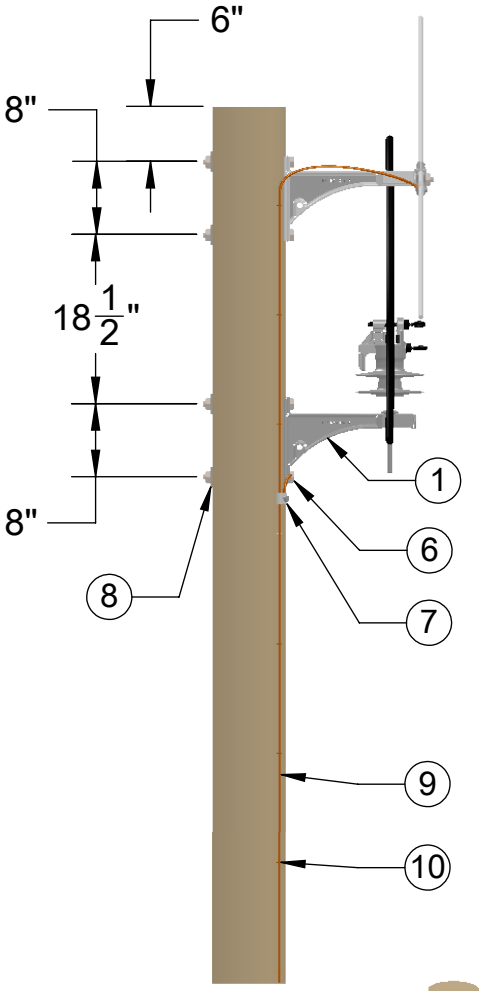

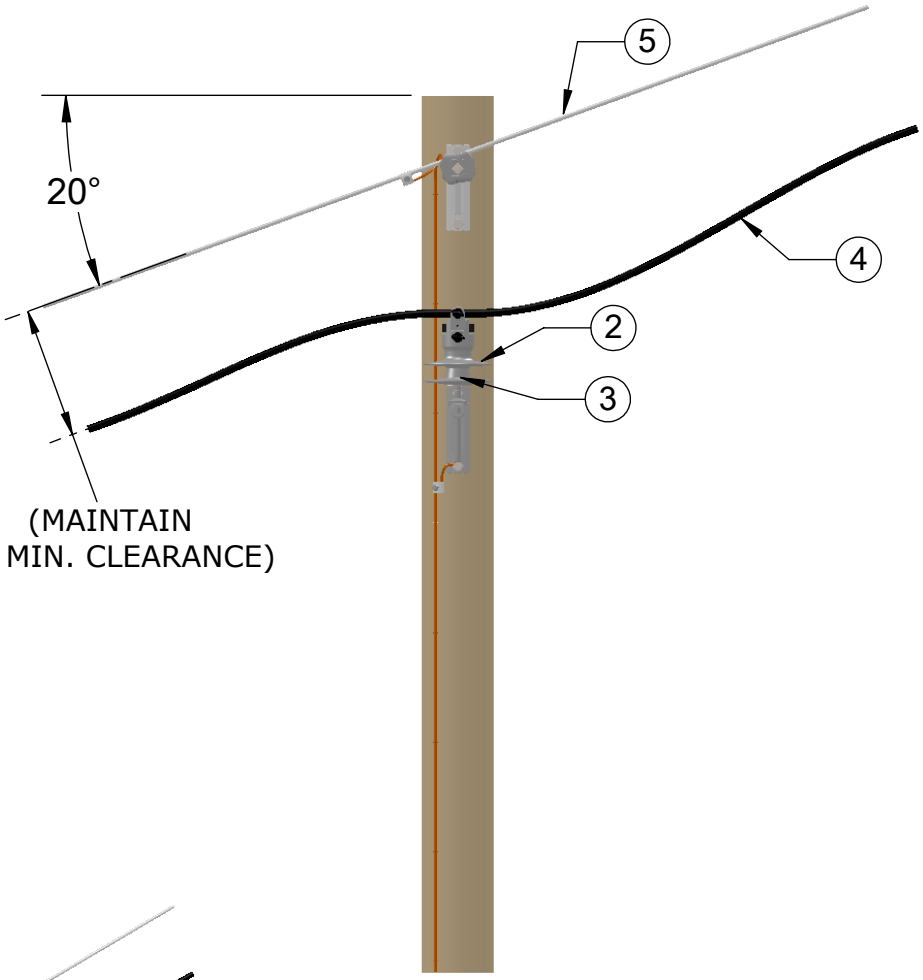

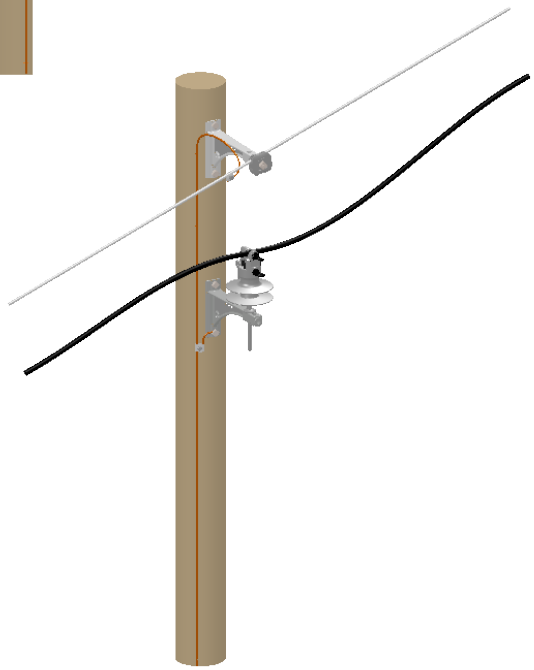

ITEM	DESCRIPTION	QTY
1	MESSENGER BRACKET, HENDRIX TYPE BM-14	1
2	INSULATOR, PIN TYPE, HENDRIX HPI-25VTP	1
3	INSULATOR PIN, HENDRIX SSP-2	1
4	HENDRIX AERIAL CABLE,(SIZE AND VOLTAGE RATING AS REQ.)	AS REQ
5	MESSENGER, (SIZE AND TYPE AS REQUIRED)	AS REQ
6	MACHINE BOLT, 5/8" X REQ. LENGTH	4
7	CONNECTORS, (SIZE AND TYPE AS REQ.)	2
8	SQUARE WASHER, 2-1/4" X 2-1/4" X 3/16" (MIN)	4
9	GROUND WIRE, SOFT DRAWN COPPER, SOLID #6AWG	AS REQ
10	GROUND WIRE STAPLE	AS REQ

DESIGN PARAMETERS
25kV
LINE ANGLES: 0-6°
ELEVATION CHANGE: 20°

TITLE
STEEP GRADE CONSTRUCTION USING BM-14

DRAWING NO. **AC1195-01** REV 0 SPACER CABLE SYSTEMS

DATE
11/09/2016

Hendrix AERIAL CABLE SYSTEMS
53 OLD WILTON RD. • MILFORD, NH 03055 • 603-673-2040